Son of... Pro Maniac
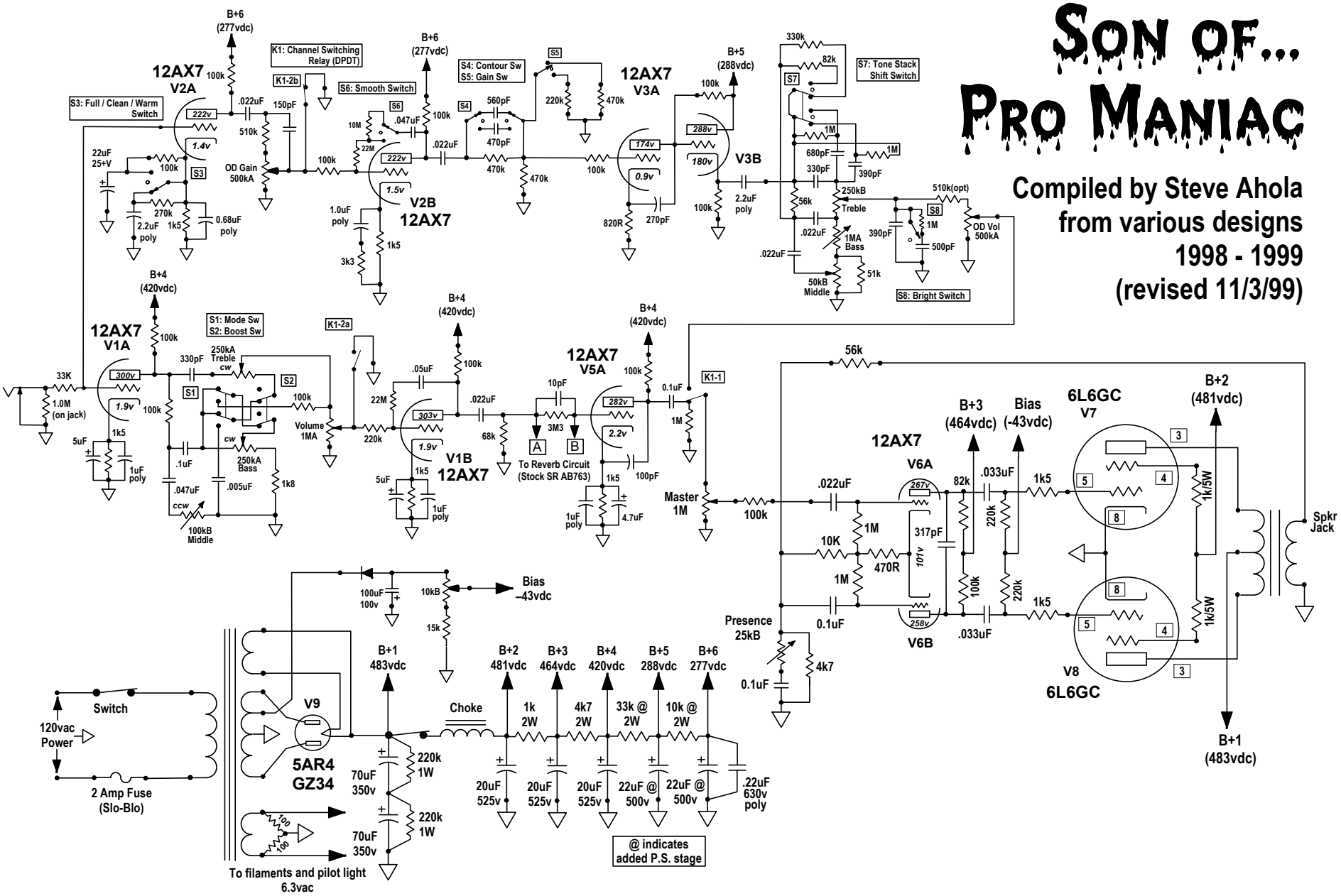
Compiled by Steve Ahola
from various designs
1998 - 1999
(revised 11/3/99)