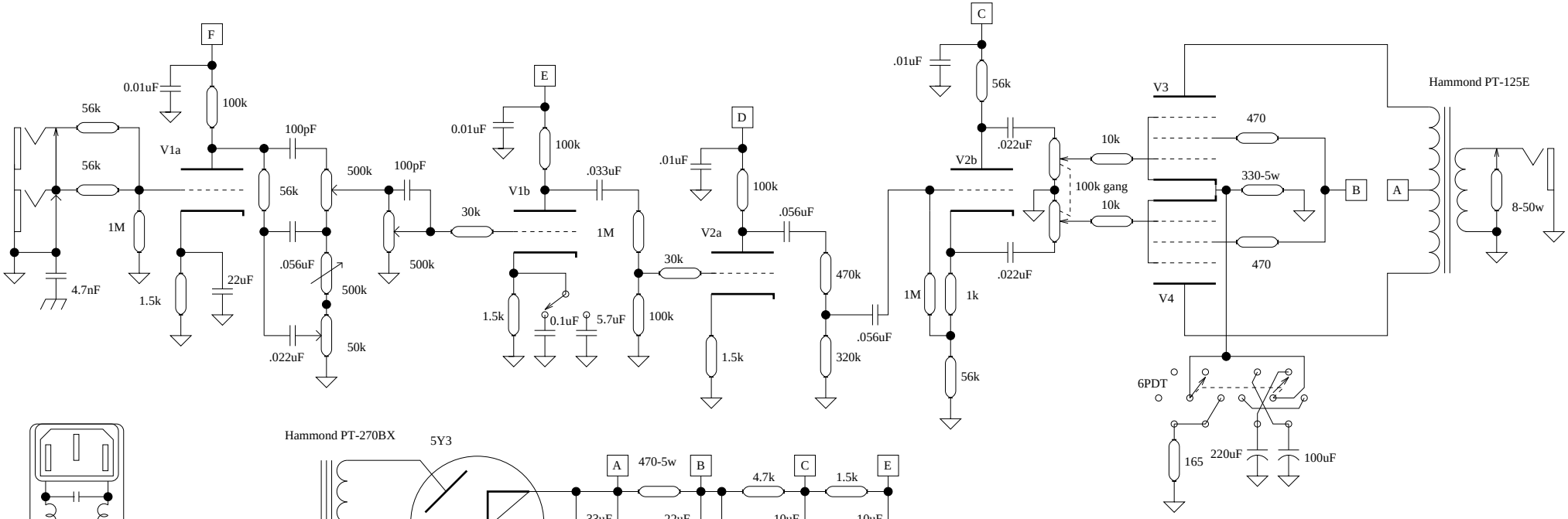

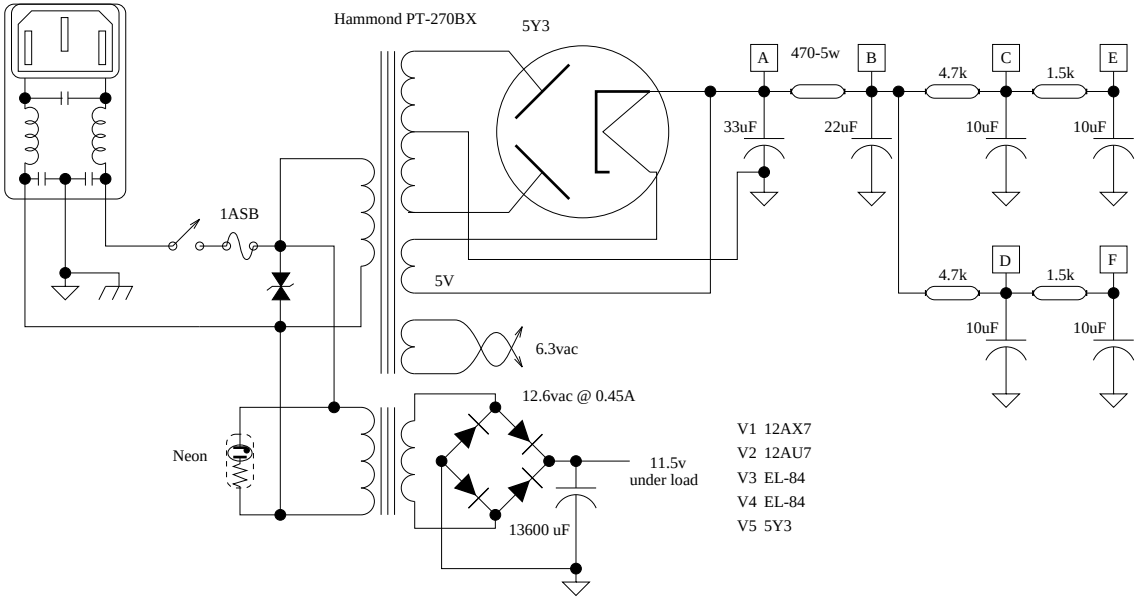

V1 12AX7
V2 12AU7
V3 EL-84
V4 EL-84
V5 5Y3

The Fat Lady amp by Nathan Stewart
Here is a link to his article about this amp:

http://www.ampage.org/htac/projects/fatlady.html